ROMA MODEL: FLANGED & PLAIN CURB

PRECAST TERRAZZO SHOWER FLOOR ARCHITECTURAL SPECIFICATIONS

SHOWER FLOOR SHALL BE PRECAST TERRAZZO AS MANUFACTURED BY CREATIVE INDUSTRIES TERRAZZO PRODUCTS, INC. RECEPTORS SHALL BE CAST AS A ONE PIECE UNIT WITH WIRE MESH REINFORCING IF SPECIFIED. FLANGE CAST INTEGRAL, SHALL BE OF GALVANIZED STEEL AND SHALL EXTEND NOT LESS THAN ONE INCH ABOVE THE SHOULDER. SHOULDER SHALL NOT BE LESS THAN ONE INCH HIGH AND NOT LESS THAN 1 1/4" WIDE. DRAIN BODY SHALL BE CAST INTEGRAL AND SHALL PROVIDE FOR A CAULKED LEAD CONNECTION NOT LESS THAN ONE INCH DEEP TO A TWO INCH PIPE. REMOVEABLE TYPE STRAINER PLATE SHALL BE MADE OF STAINLESS STEEL. TERRAZZO SHALL BE OF GENUINE BLACK AND WHITE MARBLE CHIPS CAST IN WHITE PORTLAND CEMENT TO PROVIDE A COMPRESSIVE STRENGTH OF NOT LESS THAN 5,000 PSI SEVEN DAYS AFTER CASTING. TERRAZZO SURFACES SHALL BE GROUND AND POLISHED WITH ALL AIR HOLES AND/OR PITS TO BE GROUTED AND EXCESS REMOVED AND SEALED TO RESIST STAINS AND MOISTURE. ANY OTHER COLOR COMBINATION, SIZE OR DRAIN LOCATION DESIRED CAN BE SUPPLIED AT ADDITIONAL COST.

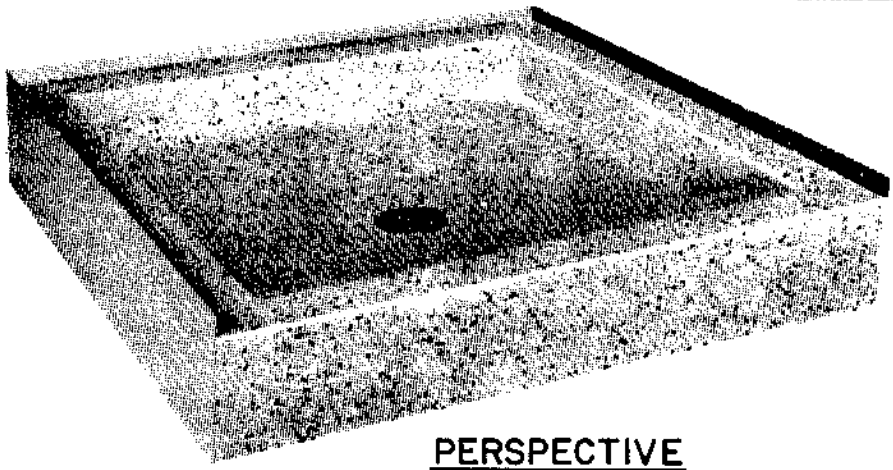

PERSPECTIVE

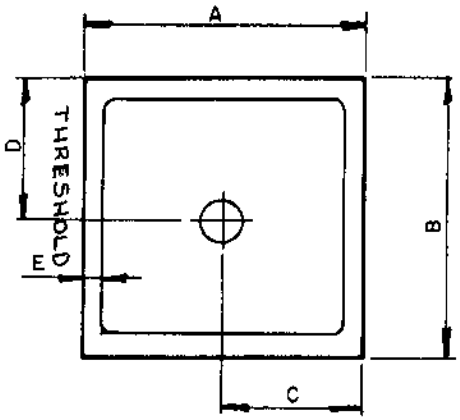

PLAN

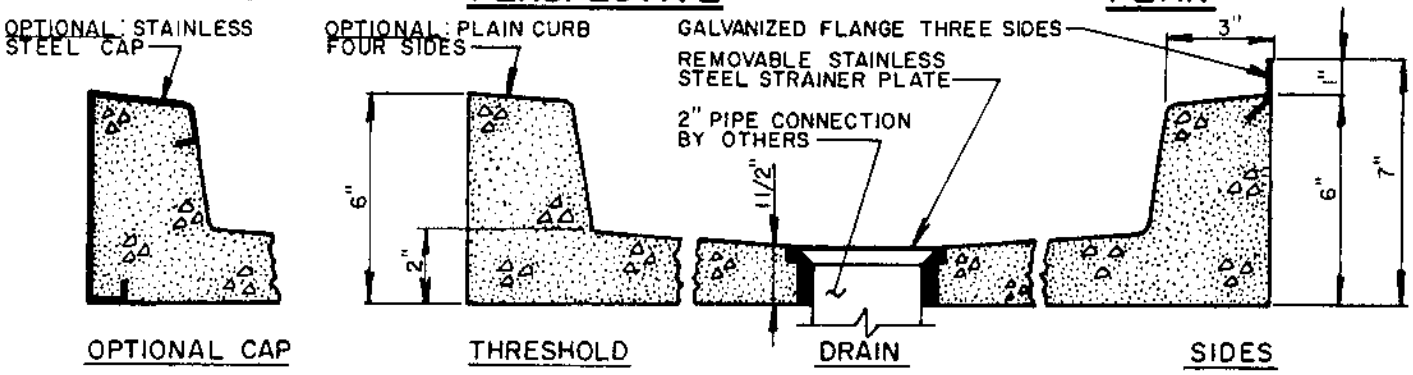

SECTION

MODEL NO	A	B	C	D	E	F	G
RF3232	32"	32"	16"	16"	3"		
RF3636	36"	36"	18"	18"	3"		
RF7236	36"	72"	18"	36"	3"		
RF4836	36"	48"	18"	24"	3"		
RF4848	48"	48"	24"	24"	3"		

IMPORTANT

THIS IS AN APPROVAL DRAWING, ALL DIMENSIONS ARE TO BE VERIFIED AND AN APPROVED COPY OF THIS PRINT IS TO BE RETURNED TO CREATIVE INDUSTRIES TERRAZZO PRODUCTS BEFORE PRODUCTION CAN PROCEED.

SHOWER FLOOR APPROVAL

MODEL NO.	
SIZE REQUIRED	
JOB	
ARCHITECT	
ENGINEER	
NO. REQUIRED	
APPROVED BY	
DATE	

CREATIVE INDUSTRIES TERRAZZO PRODUCTS, INC.

1753 NORTH SPAULDING CHICAGO, ILLINOIS 60647 (773) 235-9088 OR 235-9089