SHELFTRAY TWO COMPARTMENT LAUNDRY TRAY: MODEL #06

SHELFTRAY LAUNDRY TRAY ARCHITECTURAL SPECIFICATIONS

THE SHELFTRAY CEMENT LAUNDRY TRAY IS MADE OF WASHED AGGREGATES AND HIGH QUALITY WATERPROOF CEMENT. ROUNDED METAL RIM AND MONO SEAM CORNERS, PROTECT, EDGES AGAINST INJURIES TO TRAY OR USER. CAREFULLY FINISHED AND FREE OF AIR HOLES. THREADED 1 1/2" CAST IRON DRAIN CONNECTION, WITH BRASS STRAINER CAST IN EACH TRAY. HOLES ARE PROVIDED IN SHELFTRAY FOR BOTTOM SUPPLY FAUCET, NO DRILLING REQUIRED. THE SHELFTRAY IS BUILT WITH A 6" CAST INTEGRAL, REINFORCED, SELF-DRAINING AND PERFECTLY SMOOTH SHELF. SOAP DISH IS CAST IN THE SHELF. SHELFTRAY FEATURES A BUILT-IN NON RUST METAL WASHBOARD. OPTIONAL: STURDY, BRACED, ENAMELED HOT ROLLED STEEL ANGLE STAND WITH BALL AND CUP LEVELERS.

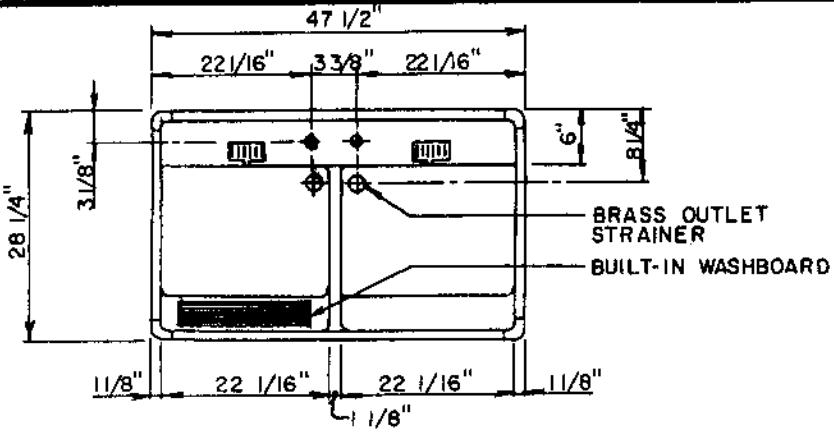

TOP VIEW

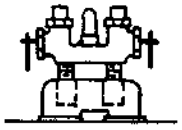

INSTALLATION DETAIL
TOP SUPPLY FAUCET WITH FAUCET ANCHOR.

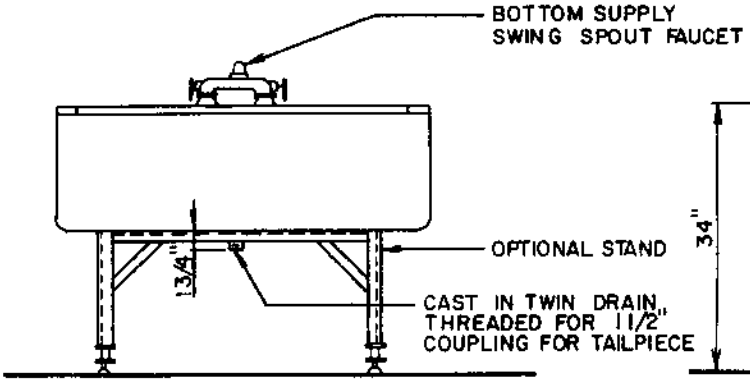

FRONT VIEW

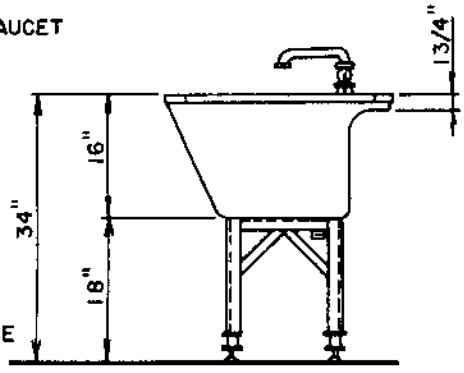

SIDE VIEW

MODEL NO.	A	B	C	D	E	F	G

IMPORTANT

THIS IS AN APPROVAL DRAWING, ALL DIMENSIONS ARE TO BE VERIFIED AND AN APPROVED COPY OF THIS PRINT IS TO BE RETURNED TO CREATIVE INDUSTRIES TERRAZZO PRODUCTS BEFORE PRODUCTION CAN PROCEED.

APPROVAL

MODEL NO.	
SIZE REQUIRED	
JOB	
ARCHITECT	
ENGINEER	
NO. REQUIRED	
APPROVED BY	
DATE	

CREATIVE INDUSTRIES TERRAZZO PRODUCTS, INC.

1753 NORTH SPAULDING CHICAGO, ILLINOIS 60647 (773) 235-9088 OR 235-9089